Atom interferometry and small-scale tests of general relativity

Mikolaj Myszkowski
University of Oxford

59. Winter School of Theoretical Physics:
“Gravity – Classical, Quantum and Phenomenology”

Outline

- Operating principles of atom interferometers.
- Detecting frame dragging effect in the small-scale regime.
- Future prospects.

What is an atom interferometer?

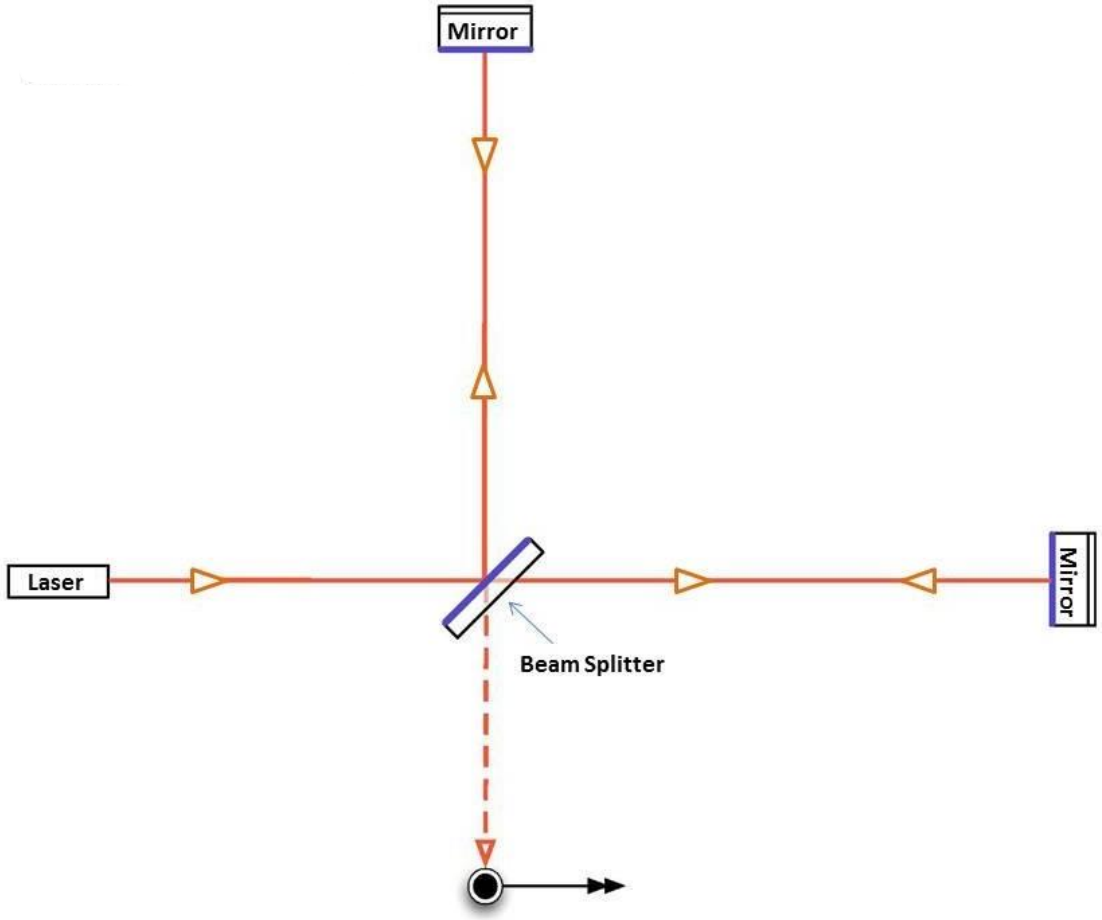

Source: LIGO observatory website

What is an atom interferometer?

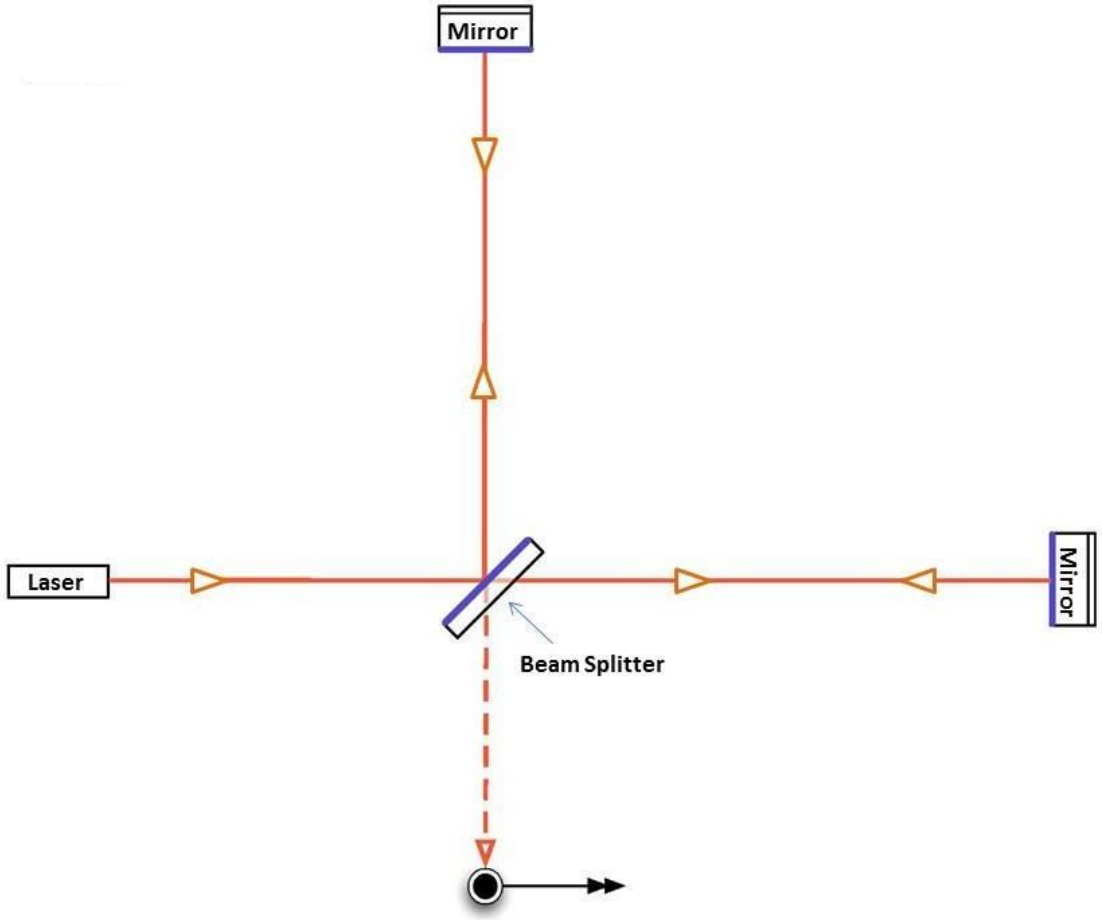

Source: LIGO observatory website

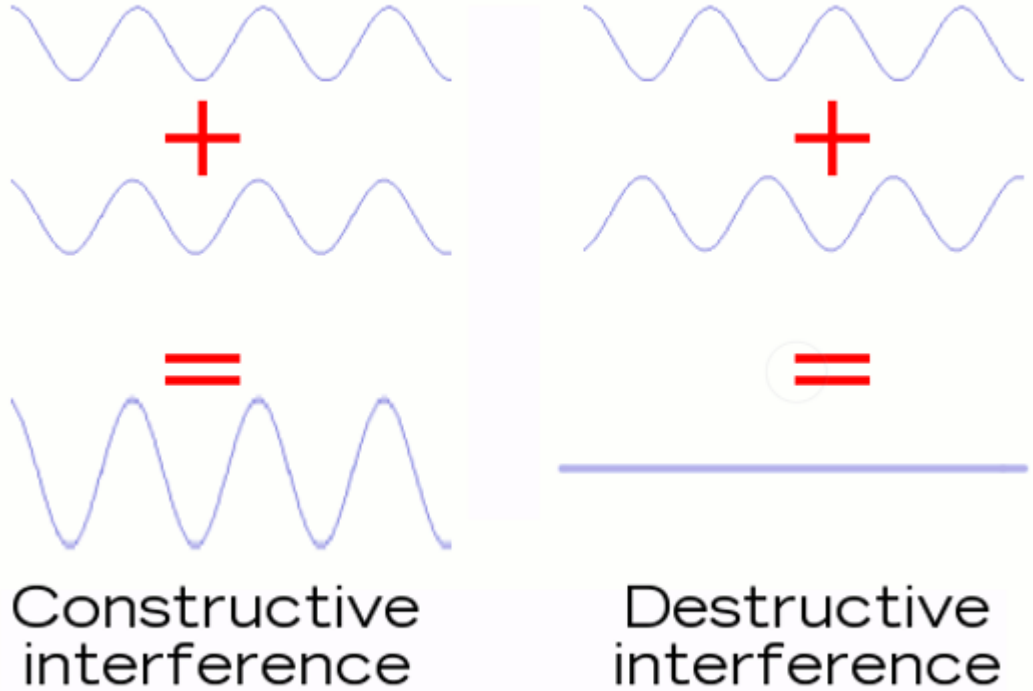

Source: LIGO observatory website

- S-Source
- L-Laser
- D-Detector

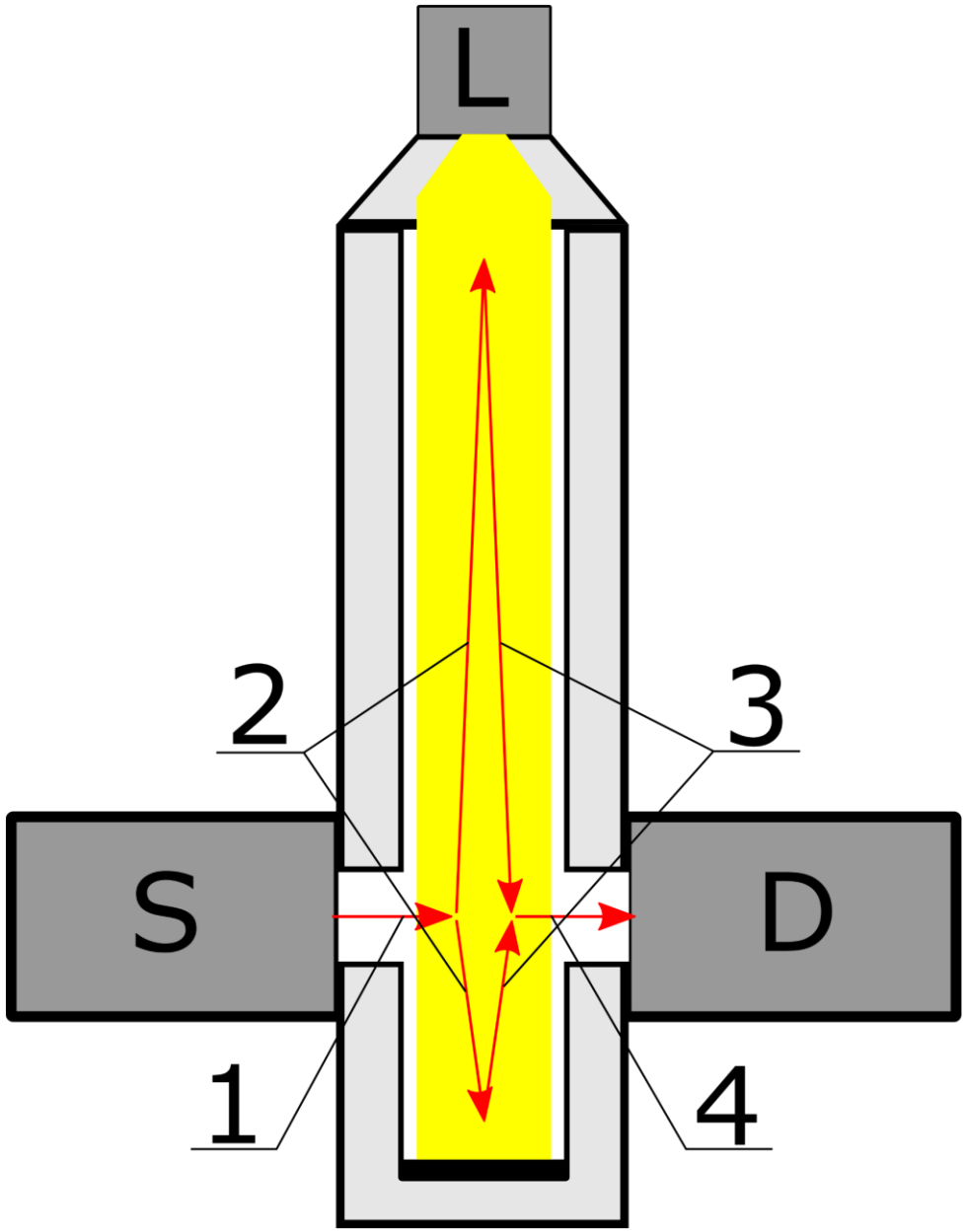

What is an atom interferometer?

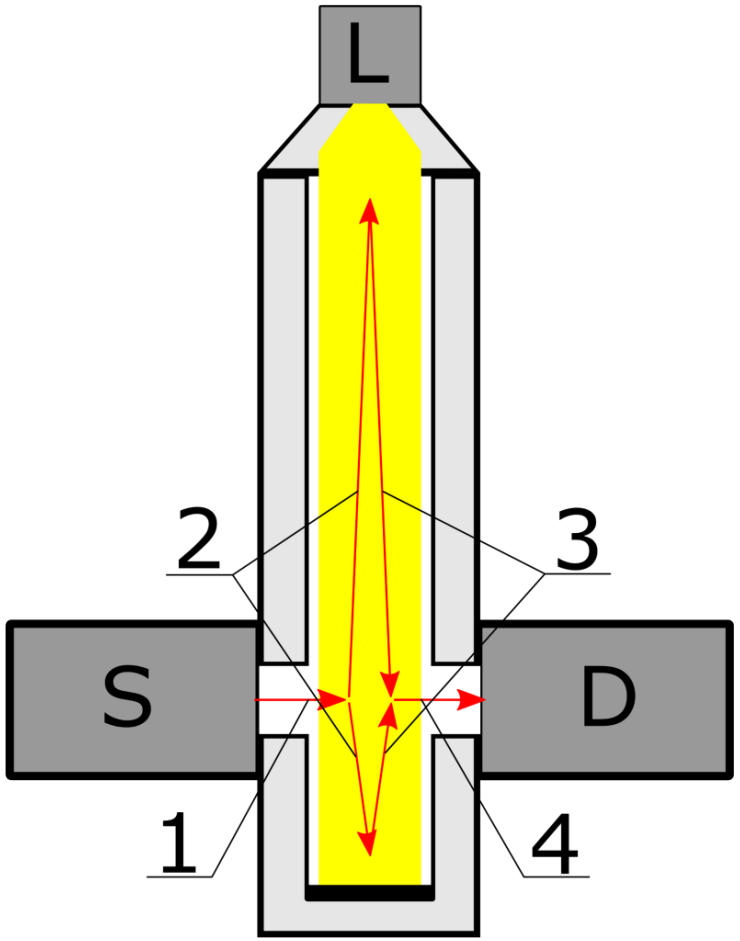

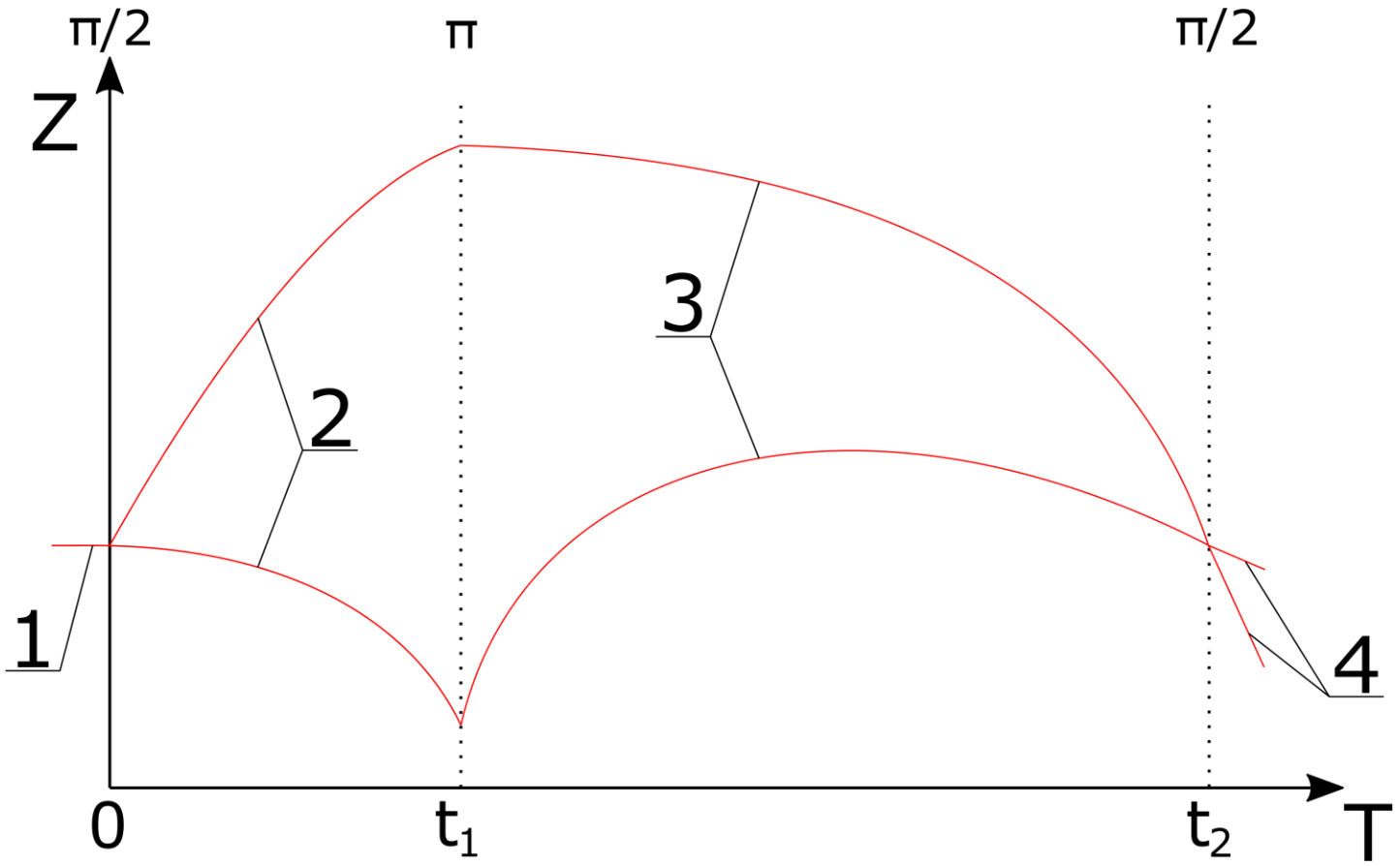

Atom interferometers and gravitational waves

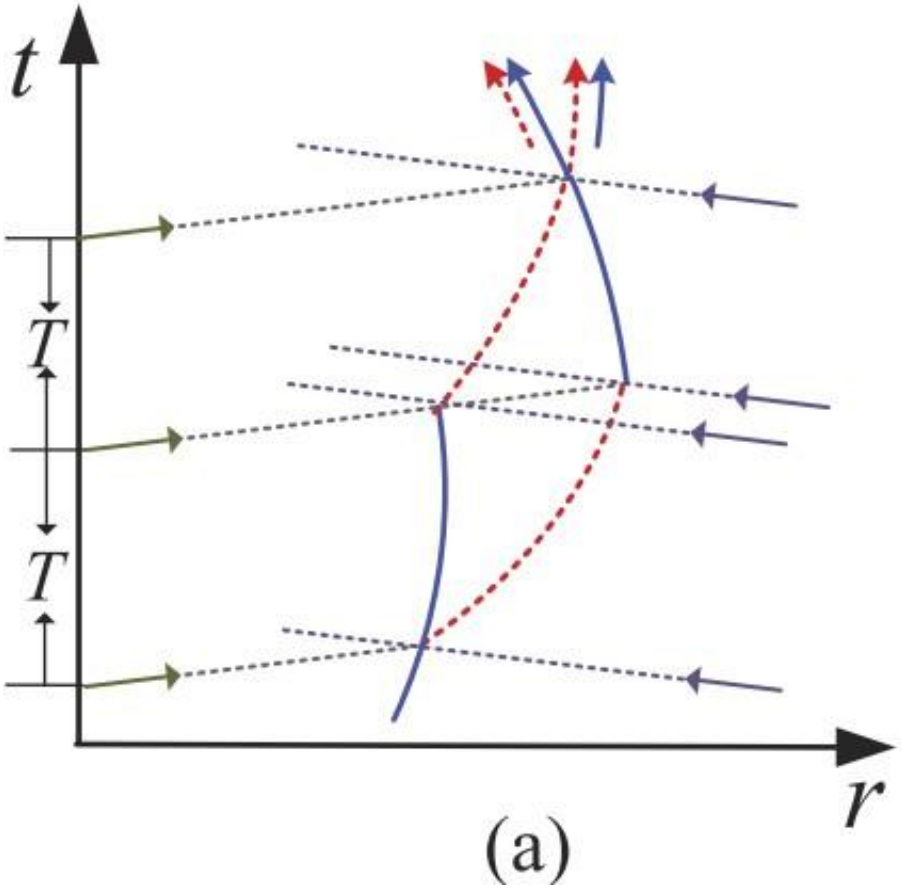

Source: Y.-J. Wang, X.-Y. Lu, C.-G. Qin et al. Classical and Quantum Gravity, Vol. 38, No. 14. (2021)

Atom interferometers and gravitational waves

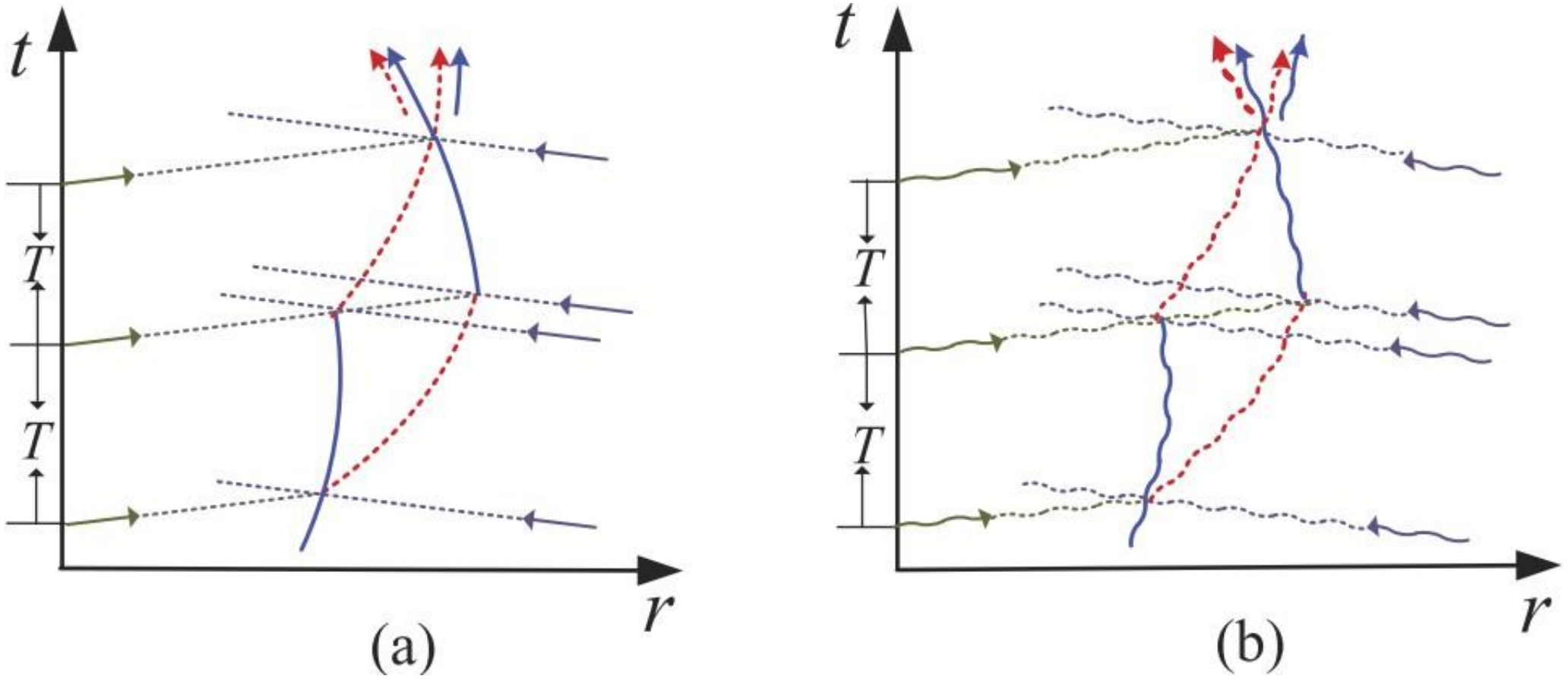

Source: Y.-J. Wang, X.-Y. Lu, C.-G. Qin et al. Classical and Quantum Gravity, Vol. 38, No. 14. (2021)

Schwarzschild metric corrections

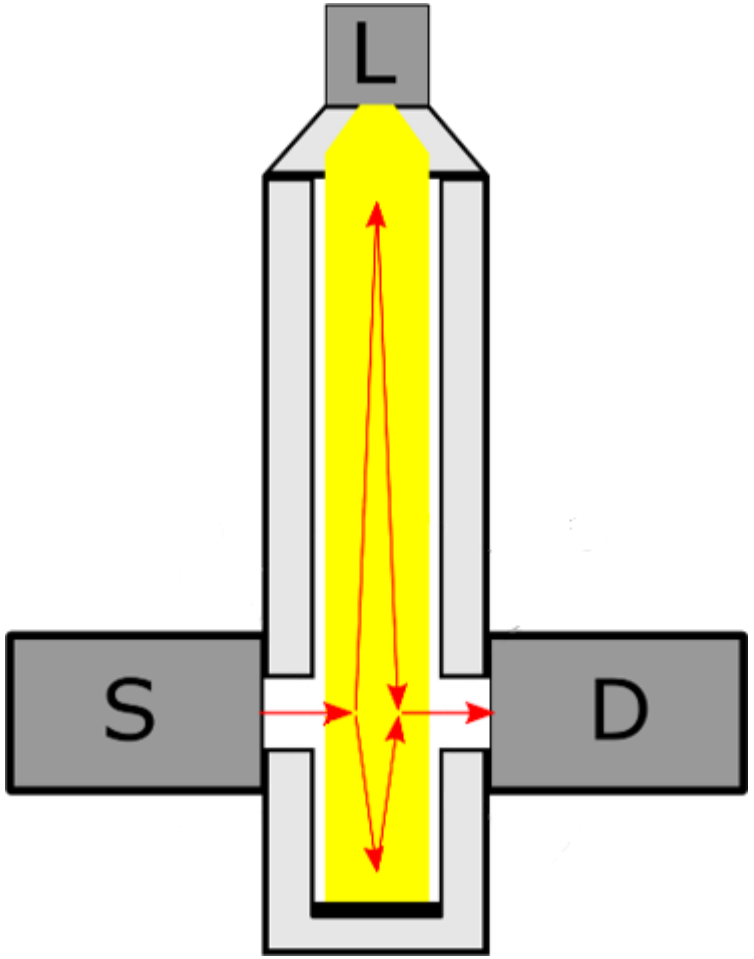

$$L \sim 10m,\ T \sim 1s,\ k \sim \frac{2\pi}{780nm}$$

Source: S. Dimopoulos, P. W. Graham, J. M. Hoganet et al. Phys. Rev. D, Vol. 78, No. 042003. (2008)

Schwarzschild metric corrections

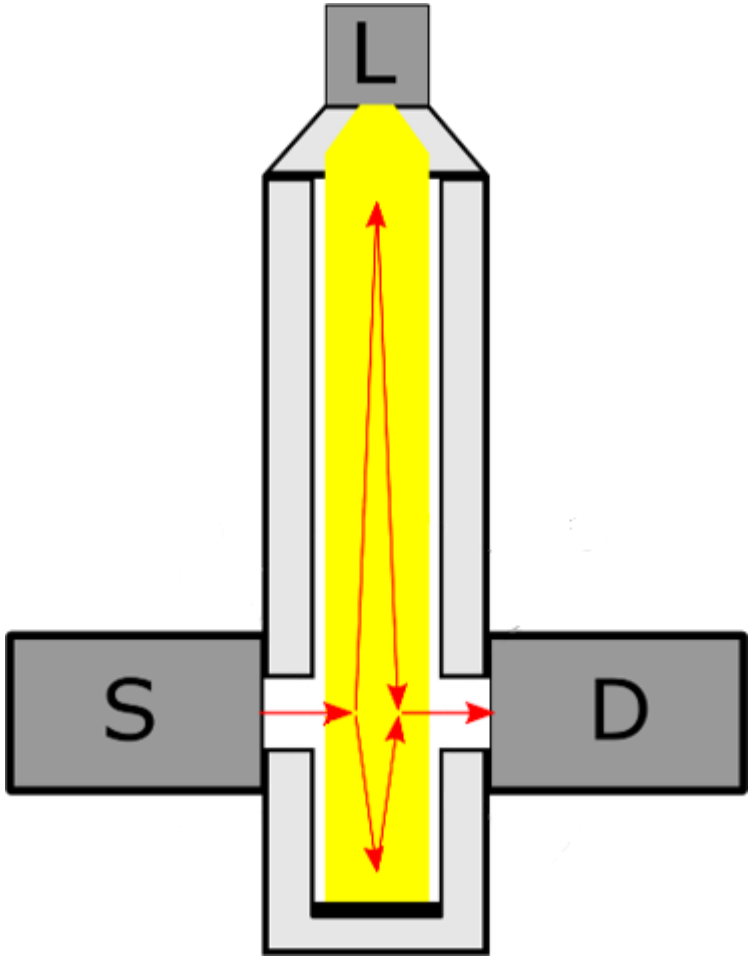

$$L \sim 10m,\ T \sim 1s,\ k \sim \frac{2\pi}{780nm}$$

Current Accuracy: $|\delta\phi| \sim 10^{-4}$rad

Source: S. Dimopoulos, P. W. Graham, J. M. Hoganet et al. Phys. Rev. D, Vol. 78, No. 042003. (2008)

Schwarzschild metric corrections

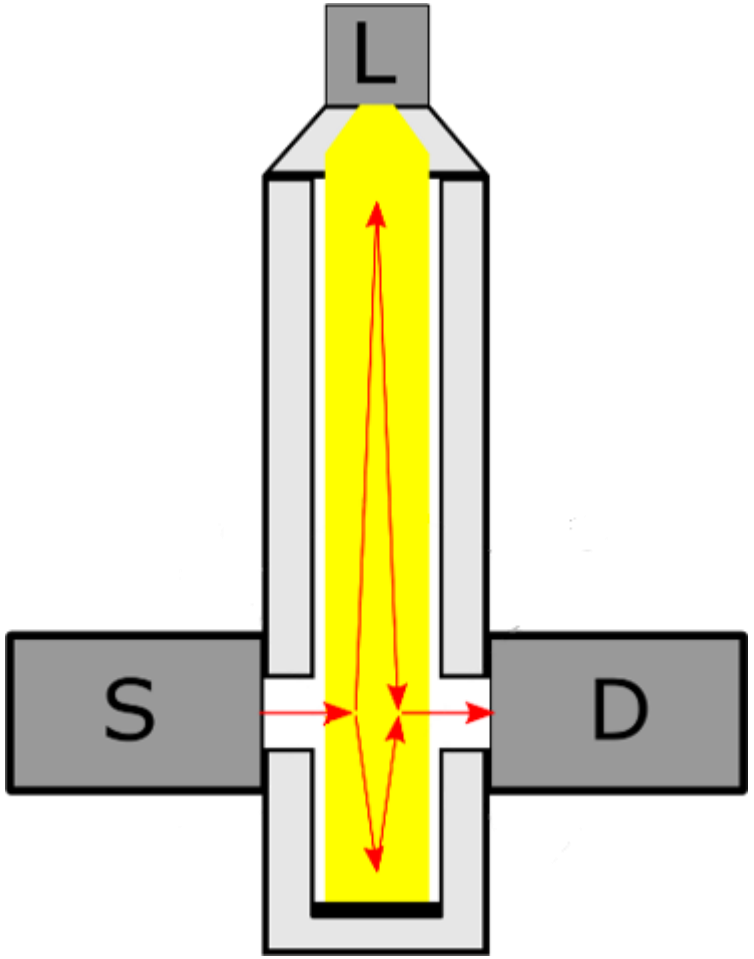

$$L \sim 10m,\ T \sim 1s,\ k \sim \frac{2\pi}{780nm}$$

Current Accuracy: $|\delta\phi| \sim 10^{-4}$rad

Leading NG: $|\delta\phi| \sim 3 \cdot 10^{8}$rad

Source: S. Dimopoulos, P. W. Graham, J. M. Hoganet et al. Phys. Rev. D, Vol. 78, No. 042003. (2008)

Schwarzschild metric corrections

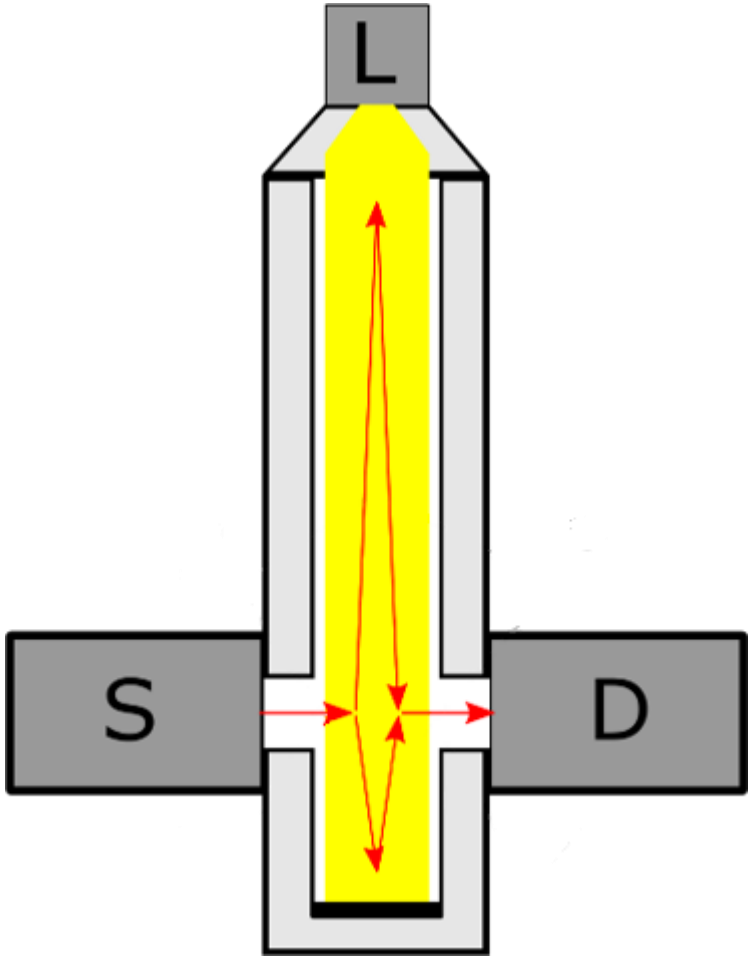

$$L \sim 10m,\ T \sim 1s,\ k \sim \frac{2\pi}{780nm}$$

Current Accuracy: $|\delta\phi| \sim 10^{-4}$rad

Leading NG: $|\delta\phi| \sim 3\cdot 10^{8}$rad

Leading SR: $|\delta\phi| \sim 4\cdot 10^{1}$rad

Source: S. Dimopoulos, P. W. Graham, J. M. Hoganet et al. Phys. Rev. D, Vol. 78, No. 042003. (2008)

Schwarzschild metric corrections

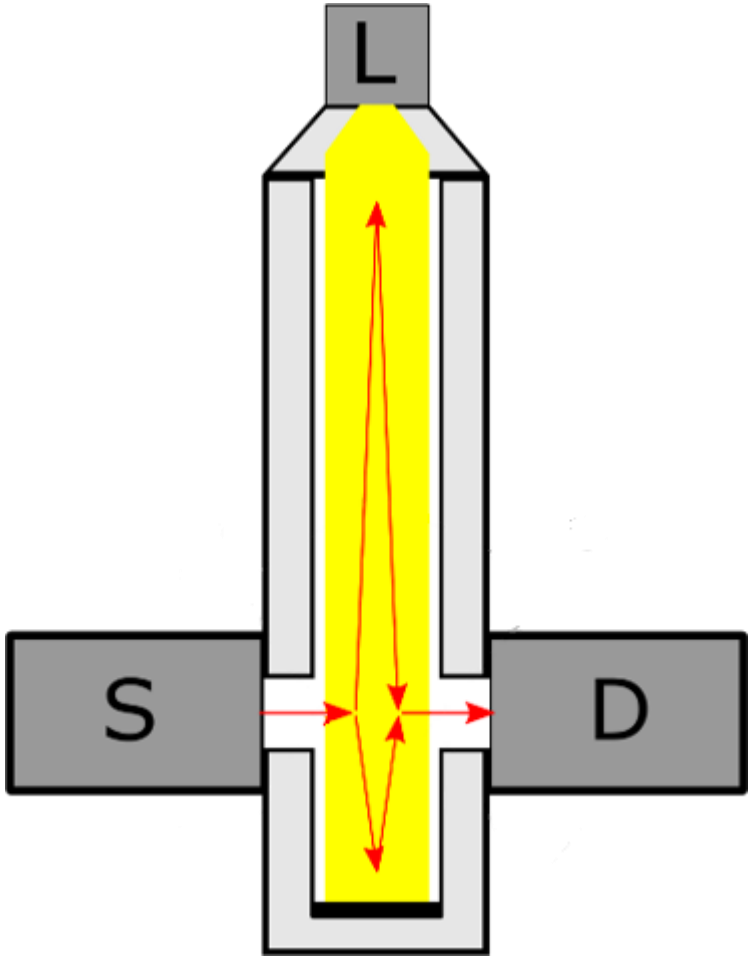

$$L \sim 10m,\ T \sim 1s,\ k \sim \frac{2\pi}{780nm}$$

Current Accuracy: $|\delta\phi| \sim 10^{-4}$rad

Leading NG: $|\delta\phi| \sim 3\cdot 10^{8}$rad

Leading SR: $|\delta\phi| \sim 4\cdot 10^{1}$rad

Leading GR: $|\delta\phi| \sim 2\cdot 10^{-1}$rad

Source: S. Dimopoulos, P. W. Graham, J. M. Hoganet et al. Phys. Rev. D, Vol. 78, No. 042003. (2008)

Probing the small-scale regime

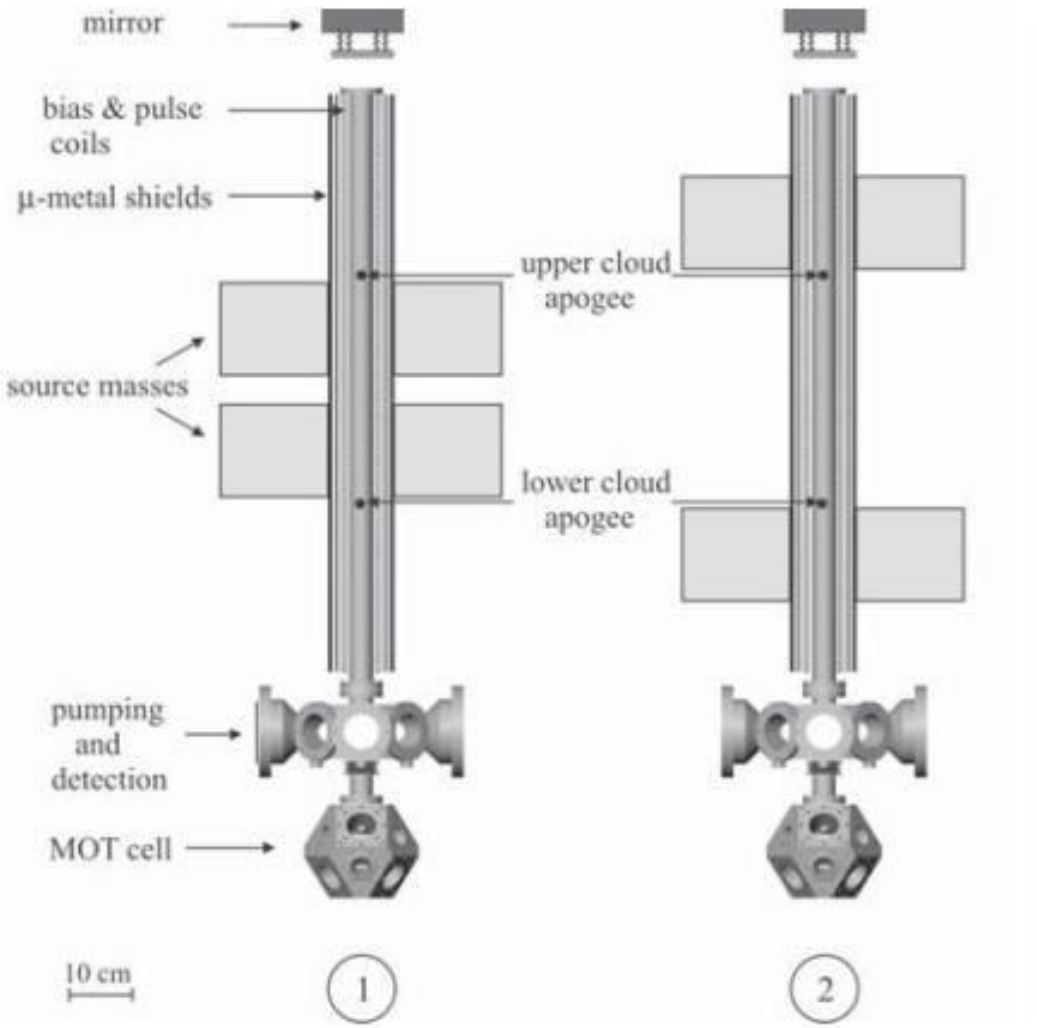

Source: A. Bertoldi, G. Lamporesi, L. Cacciapuoti et al. The European Physical Journal D - Atomic, Molecular, Optical and Plasma Physics, Vol. 40, 271–279. (2006)

Probing the small-scale regime

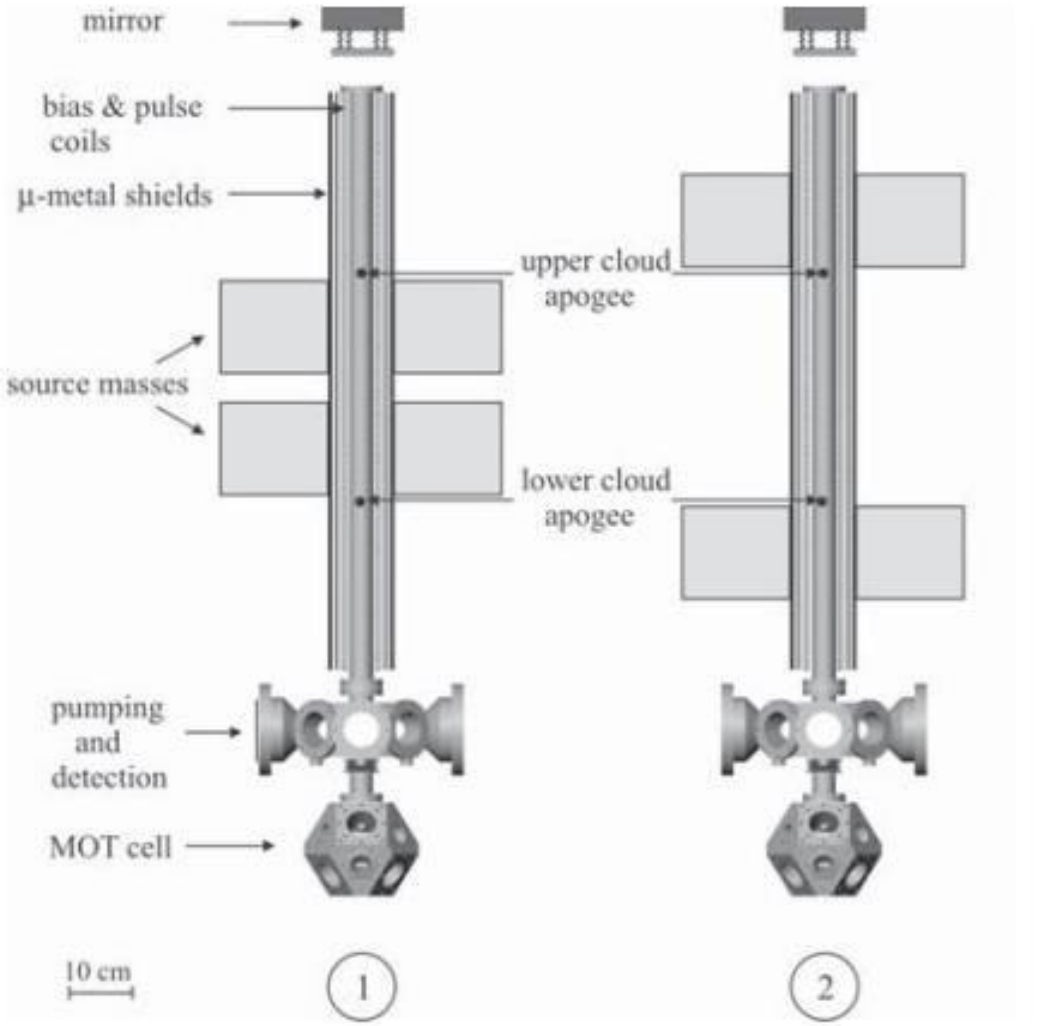

Absolute error in the measurement of the gravitational constant:

$$\delta G \sim 5 \cdot 10^{-16} m^3 kg^{-1} s^{-2}$$

Source: A. Bertoldi, G. Lamporesi, L. Cacciapuoti et al. The European Physical Journal D - Atomic, Molecular, Optical and Plasma Physics, Vol. 40, 271–279. (2006)

Probing the small-scale regime of GR

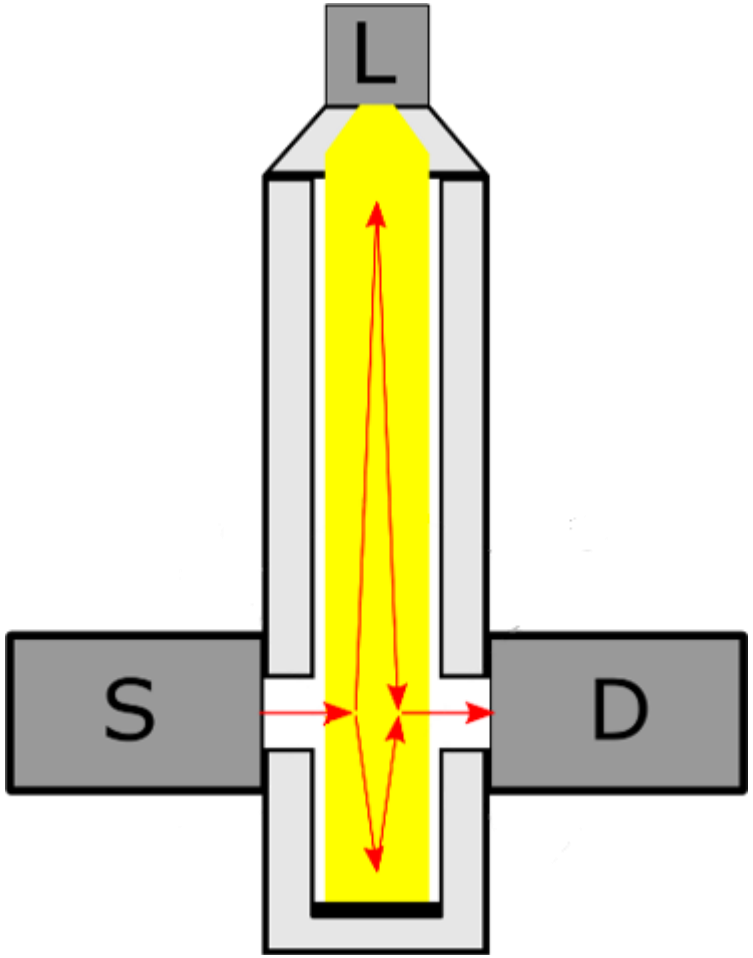

Probing the small-scale regime of GR

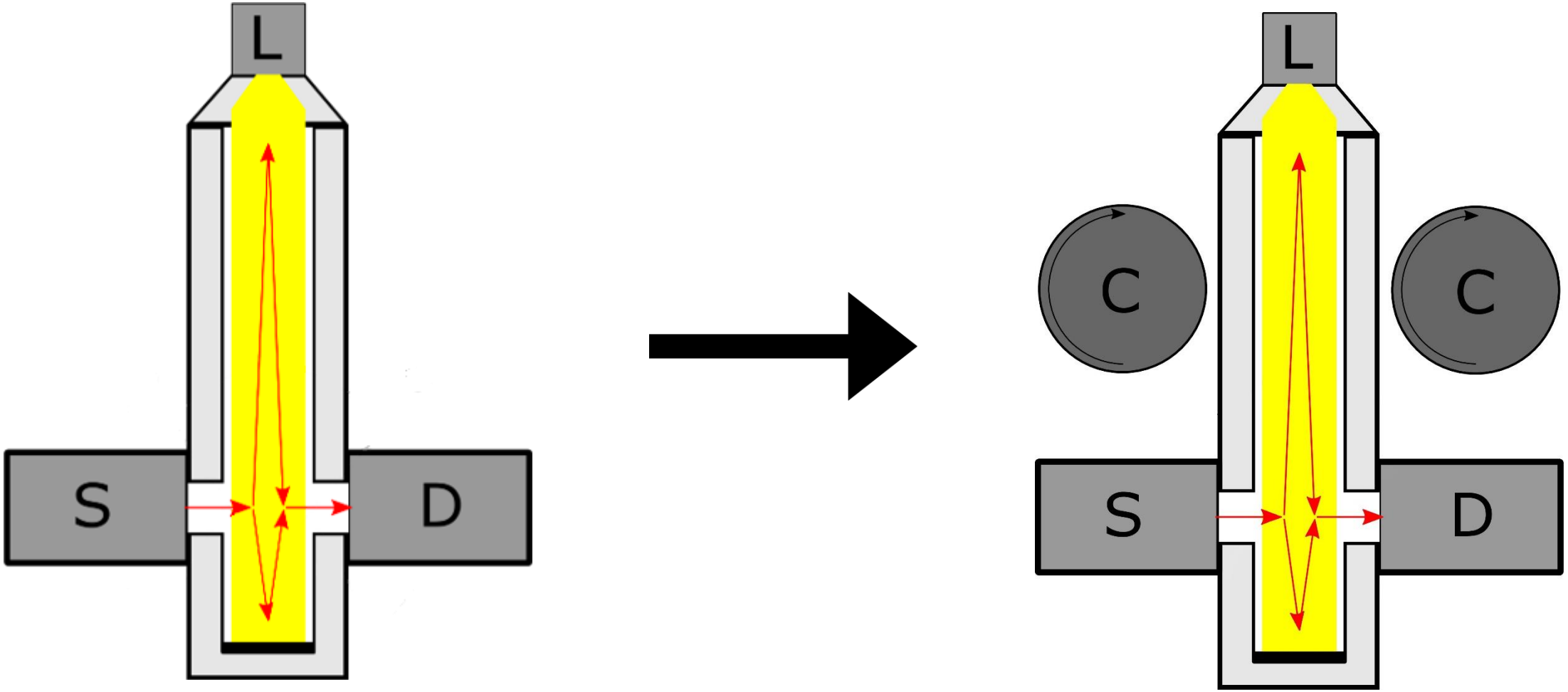

How to calculate the phase shift?

$$\delta\phi_{tot} = \delta\phi_{laser} + \delta\phi_{propagation} + \delta\phi_{separation}$$

How to calculate the phase shift?

$$\delta\phi_{tot} = \delta\phi_{laser} + \delta\phi_{propagation} + \delta\phi_{separation}$$

$$\delta\phi_{laser} = \delta\phi_{laser}^{upper} - \delta\phi_{laser}^{lower} =$$

$$= \sum_i \Delta\phi_i(\mathbf{x}_u(t_i), t_i) - \sum_i \Delta\phi_i(\mathbf{x}_l(t_i), t_i)$$

How to calculate the phase shift?

$$\delta\phi_{tot} = \delta\phi_{laser} + \delta\phi_{propagation} + \delta\phi_{separation}$$

$$\delta\phi_{laser} = \delta\phi_{laser}^{upper} - \delta\phi_{laser}^{lower} =$$

$$= \sum_i \Delta\phi_i(\mathbf{x}_u(t_i), t_i) - \sum_i \Delta\phi_i(\mathbf{x}_l(t_i), t_i)$$

Constant

How to calculate the phase shift?

$$\delta\phi_{tot} = \delta\phi_{laser} + \delta\phi_{propagation} + \delta\phi_{separation}$$

$$\delta\phi_{laser} = \delta\phi_{laser}^{upper} - \delta\phi_{laser}^{lower} =$$

$$= \sum_i \Delta\phi_i(\mathbf{x}_u(t_i), t_i) - \sum_i \Delta\phi_i(\mathbf{x}_l(t_i), t_i)$$

Constant

$$\delta\phi_{propagation} = \frac{\delta S}{\hbar} =$$

$$= \frac{mc^2}{\hbar}\left(\int_0^{t_2} d\tau_u - \int_0^{t_2} d\tau_l\right)$$

How to calculate the phase shift?

$$\delta\phi_{tot} = \delta\phi_{laser} + \delta\phi_{propagation} + \delta\phi_{separation}$$

$$\delta\phi_{laser} = \delta\phi_{laser}^{upper} - \delta\phi_{laser}^{lower} =$$

$$= \sum_i \Delta\phi_i(\mathbf{x}_u(t_i), t_i) - \sum_i \Delta\phi_i(\mathbf{x}_l(t_i), t_i)$$

Constant

$$\delta\phi_{propagation} = \frac{\delta S}{\hbar} =$$

$$= \frac{mc^2}{\hbar}\left(\int_0^{t_2} d\tau_u - \int_0^{t_2} d\tau_l\right)$$

Constant

How to calculate the phase shift?

$$\delta\phi_{tot} = \delta\phi_{laser} + \delta\phi_{propagation} + \delta\phi_{separation}$$

$$\delta\phi_{laser} = \delta\phi_{laser}^{upper} - \delta\phi_{laser}^{lower} =$$
$$= \sum_i \Delta\phi_i(\mathbf{x}_u(t_i), t_i) - \sum_i \Delta\phi_i(\mathbf{x}_l(t_i), t_i)$$

Constant

$$\delta\phi_{propagation} = \frac{\delta S}{\hbar} =$$
$$= \frac{mc^2}{\hbar}\left(\int_0^{t_2} d\tau_u - \int_0^{t_2} d\tau_l\right)$$

Constant

$$\delta\phi_{separation} = \frac{1}{\hbar}\mathbf{p}\cdot\Delta\mathbf{x}$$

How to calculate the phase shift?

$$\delta\phi_{tot} = \delta\phi_{laser} + \delta\phi_{propagation} + \delta\phi_{separation}$$

$$\delta\phi_{laser} = \delta\phi_{laser}^{upper} - \delta\phi_{laser}^{lower} =$$
$$= \sum_i \Delta\phi_i(\mathbf{x}_u(t_i), t_i) - \sum_i \Delta\phi_i(\mathbf{x}_l(t_i), t_i)$$

Constant

$$\delta\phi_{propagation} = \frac{\delta S}{\hbar} =$$
$$= \frac{mc^2}{\hbar}\left(\int_0^{t_2} d\tau_u - \int_0^{t_2} d\tau_l\right)$$

Constant

$$\delta\phi_{separation} = \frac{1}{\hbar}\mathbf{p}\cdot\Delta\mathbf{x}$$

$\delta\phi_{separation} \sim \omega$

Probing the small-scale regime of GR

Cylinders: $R \sim 3\text{m}$, $W \sim 0.2\text{m}$,
$\rho \sim 8 \cdot 10^3 \text{kg} \cdot m^{-3}$, $\omega \sim 2 \cdot 10^2 \text{ rad} \cdot s^{-1}$

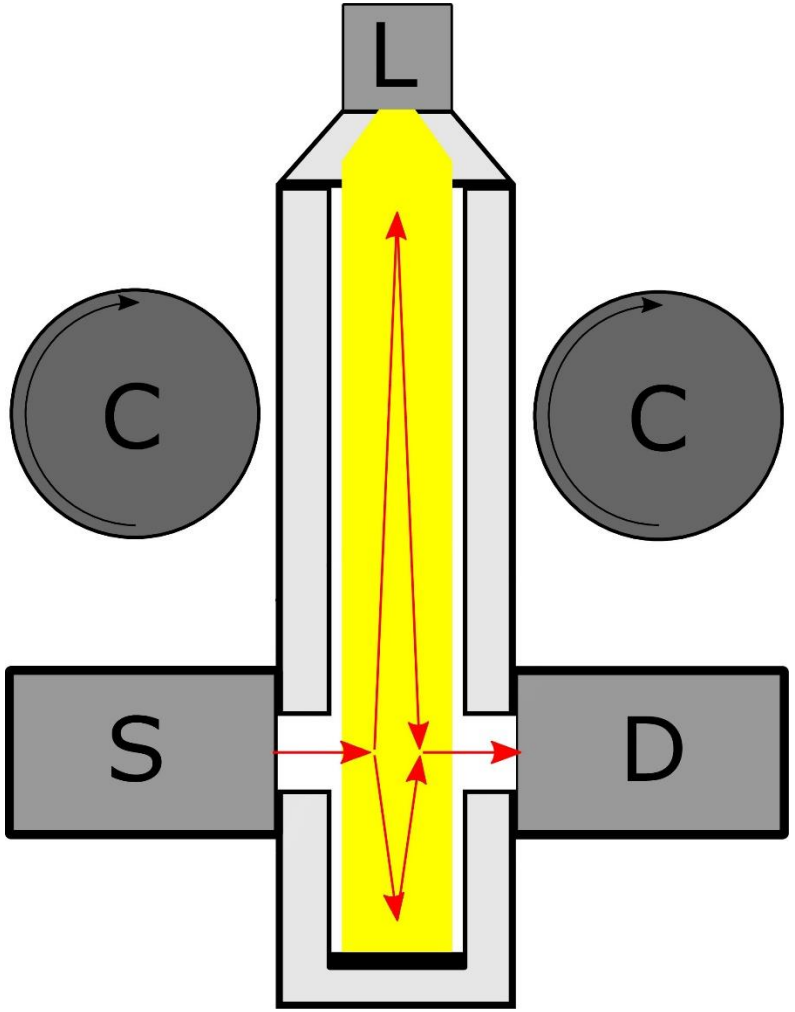

Probing the small-scale regime of GR

Cylinders: $R \sim 3\text{m}$, $W \sim 0.2\text{m}$,
$\rho \sim 8 \cdot 10^3 \text{kg} \cdot m^{-3}$, $\omega \sim 2 \cdot 10^2 \text{ rad} \cdot s^{-1}$

Interferometer: $L \sim 10\text{m}$, $T \sim 1\text{s}$, $k \sim \frac{2\pi}{780nm}$

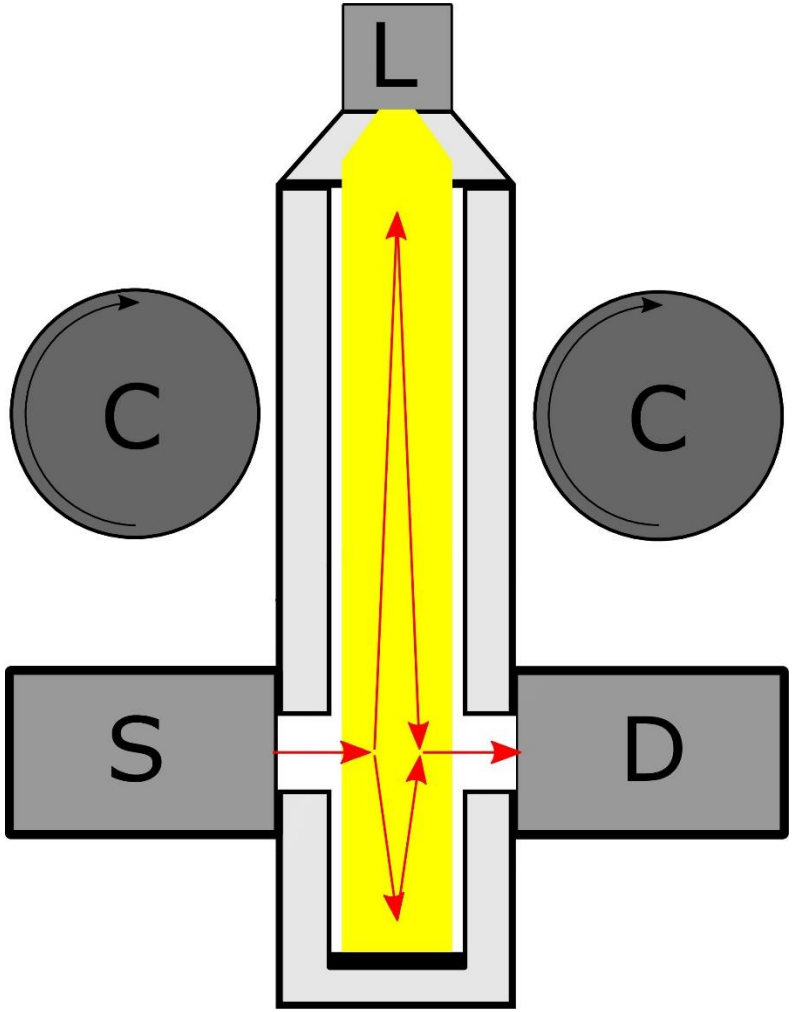

Probing the small-scale regime of GR

Cylinders: $R \sim 3\text{m}, W \sim 0.2\text{m},$
$\rho \sim 8 \cdot 10^3 \text{kg} \cdot m^{-3}, \omega \sim 2 \cdot 10^2 \text{ rad} \cdot s^{-1}$

Interferometer: $L \sim 10\text{m}, T \sim 1\text{s}, k \sim \frac{2\pi}{780nm}$

Current Accuracy: $|\delta\phi| \sim 10^{-4}\text{rad}$

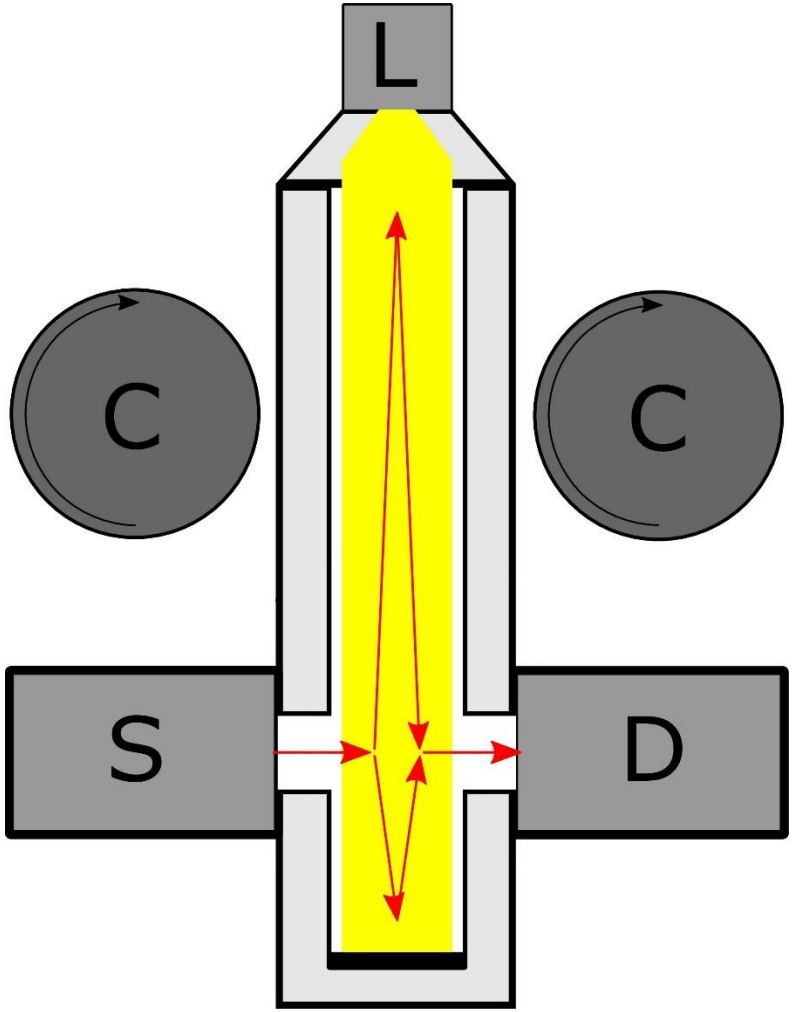

Probing the small-scale regime of GR

Cylinders: $R \sim 3\text{m}, W \sim 0.2\text{m},$
$\rho \sim 8 \cdot 10^3 \text{kg} \cdot m^{-3}, \omega \sim 2 \cdot 10^2 \text{ rad} \cdot s^{-1}$

Interferometer: $L \sim 10\text{m}, T \sim 1\text{s}, k \sim \frac{2\pi}{780nm}$

Current Accuracy: $|\delta\phi| \sim 10^{-4}\text{rad}$

Predicted Phase Shift: $|\delta\phi| \sim 10^{-10}\text{rad}$

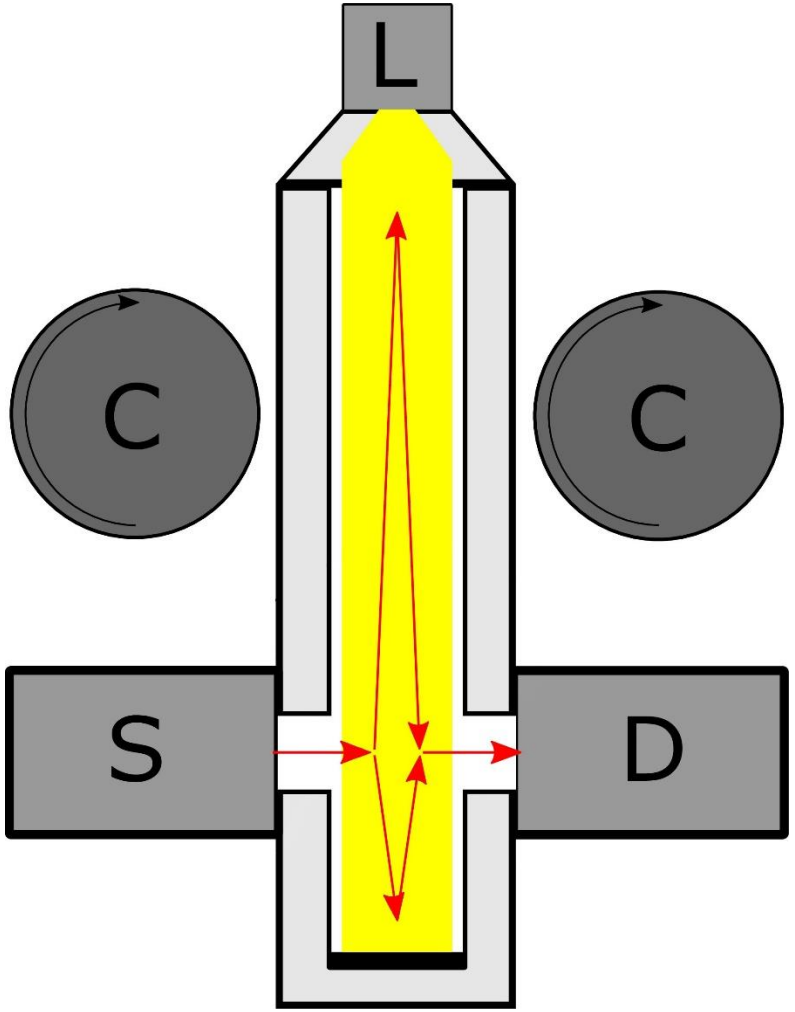

What comes next?

Source: L. Badurina, E. Bentine, D. Blas et al. Journal of Cosmology and Astroparticle Physics, Vol. 2020, No. 5. (2020)

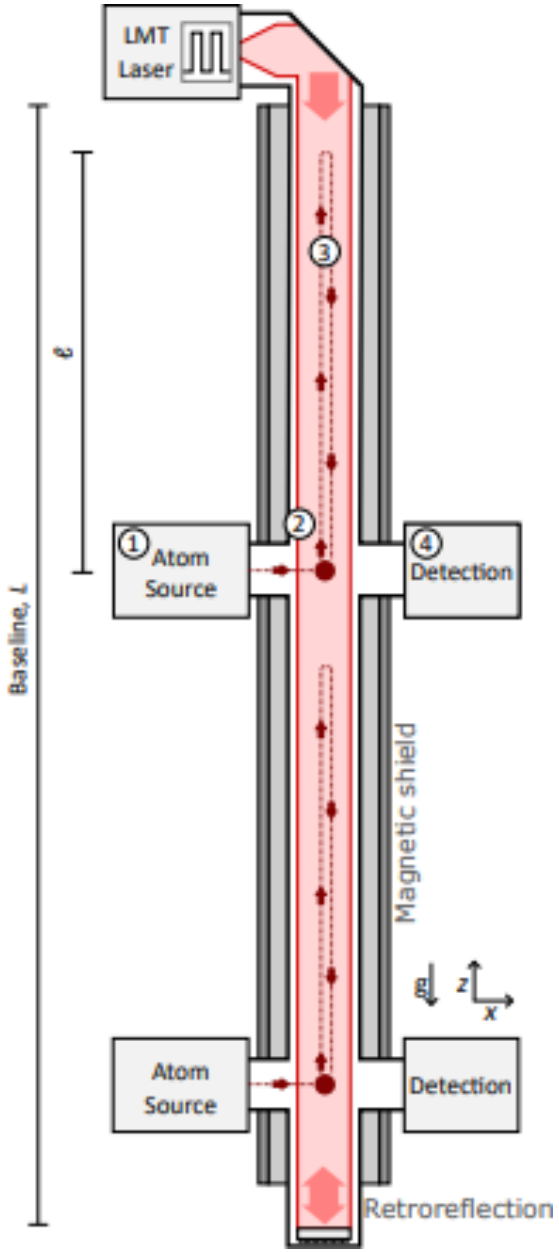

What comes next?

Sensitivity Scenario	L [m]	T [sec]	$\delta\phi_{\text{noise}}$ $[1/\sqrt{\text{Hz}}]$	LMT [number n]
AION-10 (initial)	10	1.4	10^{-3}	100
AION-10 (goal)	10	1.4	10^{-4}	1000
AION-100 (initial)	100	1.4	10^{-4}	1000
AION-100 (goal)	100	1.4	10^{-5}	40000
AION-km	2000	5	0.3×10^{-5}	40000

Source: L. Badurina, E. Bentine, D. Blas et al. Journal of Cosmology and Astroparticle Physics, Vol. 2020, No. 5. (2020)

What comes next?

Sensitivity Scenario	L [m]	T [sec]	$\delta\phi_{\text{noise}}$ $[1/\sqrt{\text{Hz}}]$	LMT [number n]
AION-10 (initial)	10	1.4	10^{-3}	100
AION-10 (goal)	10	1.4	10^{-4}	1000
AION-100 (initial)	100	1.4	10^{-4}	1000
AION-100 (goal)	100	1.4	10^{-5}	40000
AION-km	2000	5	0.3×10^{-5}	40000

Predicted Phase Shift: $|\delta\phi| \sim 10^{-7}\text{rad}$

Source: L. Badurina, E. Bentine, D. Blas et al. Journal of Cosmology and Astroparticle Physics, Vol. 2020, No. 5. (2020)

Key takeaway:

- The techniques of atom interferometry could also provide a viable way of probing the frame dragging effect in the small-scale regime.

The end

Sources:

- Y.-J. Wang, X.-Y. Lu, C.-G. Qin et al. “*Modeling gravitational wave detection with atom interferometry*”, Classical and Quantum Gravity, Vol. 38, No. 14. (2021)
- S. Dimopoulos, P. W. Graham, J. M. Hoganet et al. “*General relativistic effects in atom interferometry*” Phys. Rev. D, Vol. 78, No. 042003. (2008)
- A. Bertoldi, G. Lamporesi, L. Cacciapuoti et al. “*Atom interferometry gravity-gradiometer for the determination of the Newtonian gravitational constant G*”, The European Physical Journal D - Atomic, Molecular, Optical and Plasma Physics, Vol. 40, 271–279. (2006)
- L. Badurina, E. Bentine, D. Blas et al. “AION: an atom interferometer observatory and network”, Journal of Cosmology and Astroparticle Physics, Vol. 2020, No. 5. (2020)
- M. Myszkowski, “Atom interferometers and a small-scale test of general relativity”, General Relativity and Gravitation, Vol. 54, 144 (2022)
- LIGO observatory website

APPENDIX

$$g_{\mu\nu} = \eta_{\mu\nu} + h_{\mu\nu}$$

$$\partial_\tau^2 x^\mu = -\Gamma^\mu_{\alpha\beta}\partial_\tau x^\alpha \partial_\tau x^\beta$$

$$\partial_t^2 x^i \approx -c^2\left(\Gamma^i_{00} + 2\Gamma^i_{0j}\frac{v^j}{c} + \Gamma^i_{jk}\frac{v^j v^k}{c^2}\right) \approx -c^2\Gamma^i_{00} - 2c\Gamma^i_{0j}v^j$$

$$\Gamma^i_{00} = -\frac{1}{2}\partial^i h_{00},\ \Gamma^i_{0j} = \frac{1}{2}\left(\partial_j h^i_0 - \partial^i h_{0j}\right)$$

$$E_i = \frac{c^2}{2}\partial_i h_{00},\ B_i = c\epsilon_{ijk}\partial_j h_{0k}$$

$$\partial_t^2 \mathbf{x} = \mathbf{E} + \mathbf{v} \times \mathbf{B}$$

APPENDIX

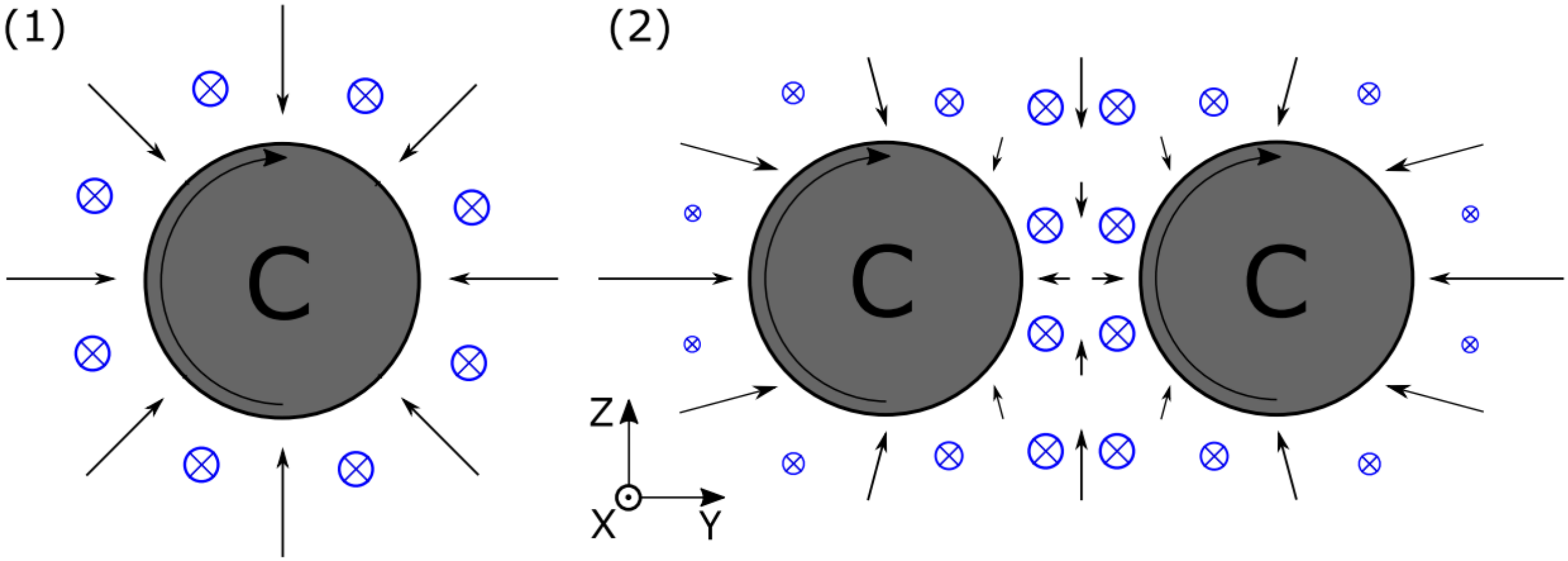

APPENDIX

	GR phase shift	Size (rad)	Interpretation	NR phase shift
1.	$-k_{\text{eff}} g T^2$	3×10^8	Newtonian gravity	$-k_{\text{eff}} g T^2$
2.	$-k_{\text{eff}} (\partial_r g) v_L T^3$	-2×10^3	1st gradient	$-k_{\text{eff}} (\partial_r g) v_L T^3$
3.	$-\frac{7}{12} k_{\text{eff}} (\partial_r g) T^4$	9×10^2		$-\frac{7}{12} k_{\text{eff}} (\partial_r g) T^4$
4.	$-3 k_{\text{eff}} g^2 T^3$	-4×10^1	finite speed of light and	
5.	$-3 k_{\text{eff}} g v_L T^2$	4×10^1	Doppler shift corrections	
6.	$-\frac{k_{\text{eff}}^2}{2m} (\partial_r g) T^3$	-7×10^{-1}	1st gradient recoil	$-\frac{k_{\text{eff}}^2}{2m} (\partial_r g) T^3$
7.	$(\omega_{\text{eff}} - \omega_a) g T^2$	-4×10^{-1}	detuning	
8.	$(2 - 2\beta - \gamma) k_{\text{eff}} g \phi T^2$	-2×10^{-1}	GR (nonlinearity)	
9.	$-\frac{3k_{\text{eff}}^2}{2m} g T^2$	2×10^{-2}		
10.	$-\frac{7}{12} k_{\text{eff}} v_L^2 (\partial_r^2 g) T^4$	8×10^{-3}	2nd gradient	$-\frac{7}{12} k_{\text{eff}} v_L^2 (\partial_r^2 g) T^4$
11.	$-\frac{35}{4} k_{\text{eff}} (\partial_r g) g v_L T^4$	6×10^{-4}		
12.	$-4 k_{\text{eff}} (\partial_r g) v_L^2 T^3$	-3×10^{-4}		
13.	$2 \omega_a g^2 T^3$	2×10^{-4}		
14.	$2 \omega_a g v_L T^2$	-2×10^{-4}		
15.	$-\frac{7k_{\text{eff}}^2}{12m} v_L (\partial_r^2 g) T^4$	7×10^{-6}	2nd gradient recoil	$-\frac{7k_{\text{eff}}^2}{12m} v_L (\partial_r^2 g) T^4$
16.	$-12 k_{\text{eff}} g^2 v_L T^3$	-7×10^{-6}		

S. Dimopoulos, P. W. Graham, J. M. Hoganet et al. "*General relativistic effects in atom interferometry*" Phys. Rev.D, Vol. 78, No. 042003. (2008)